PCB MonoVoks4

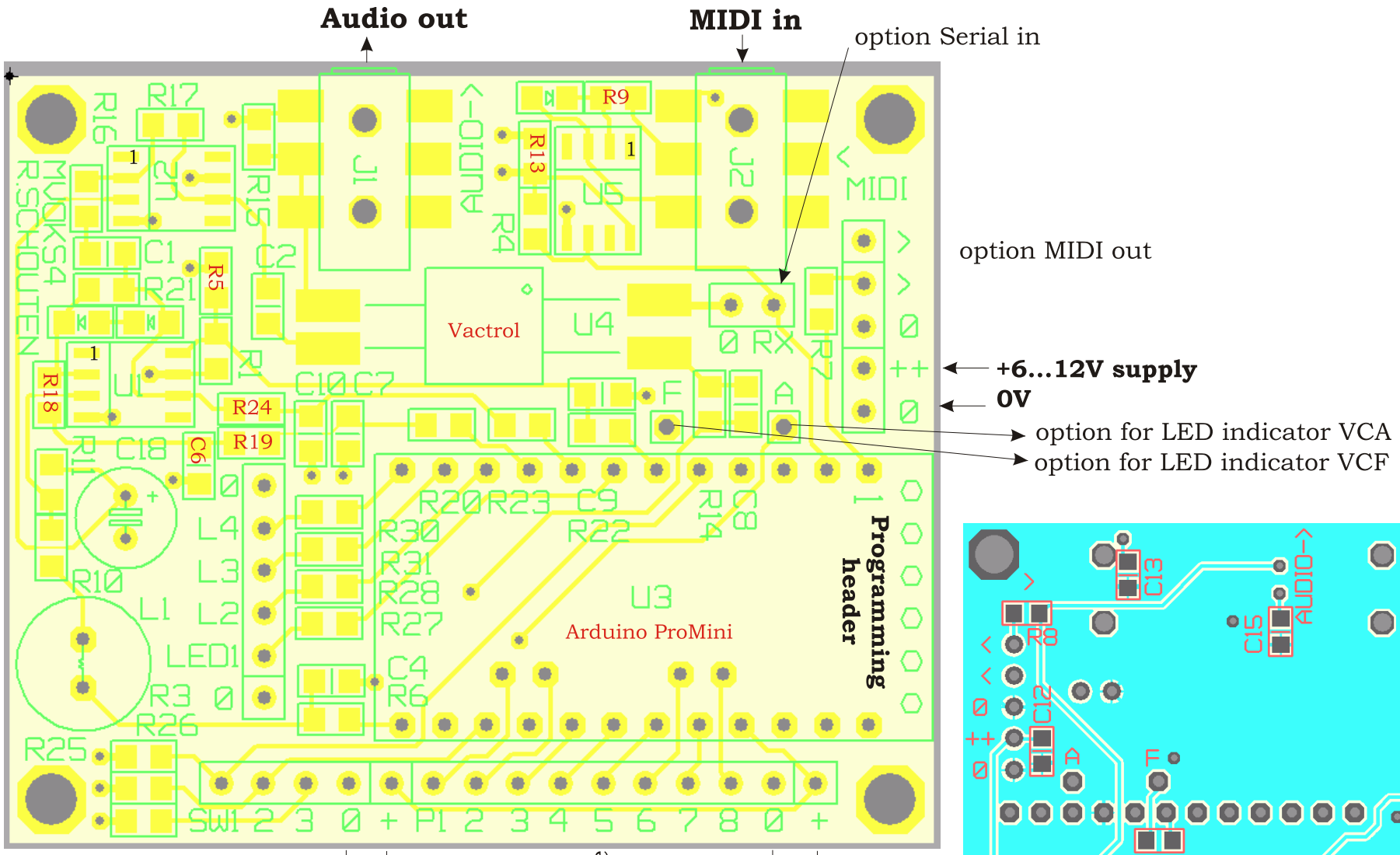

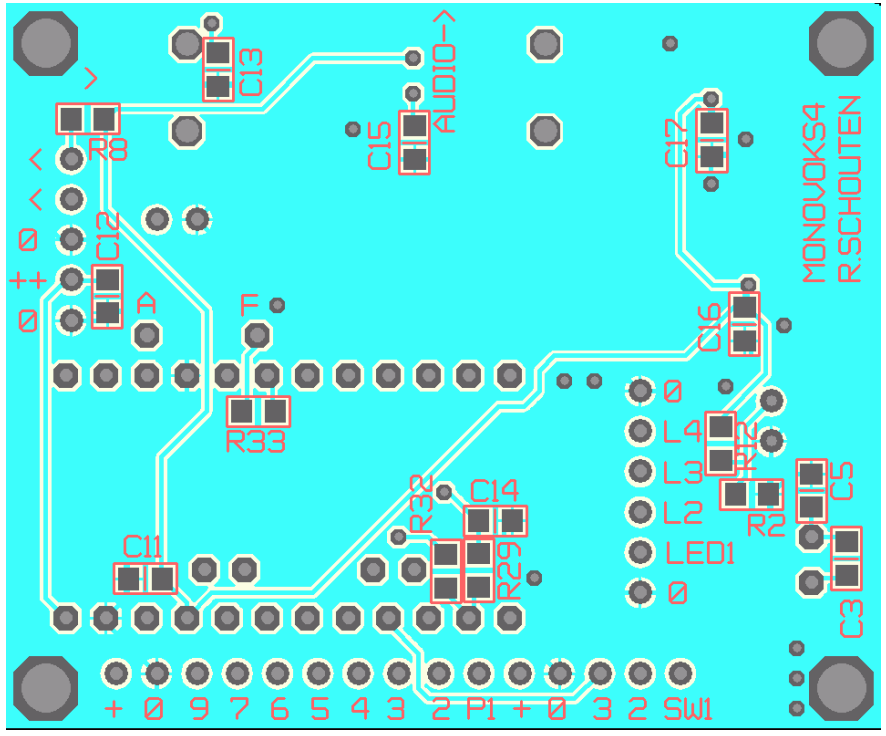

LED's:
0 =ground
L1=Mod1
L2=Mod2
L3=Env1
L4=Env2

ENV2 | ENV1 | Trig PB | 0V+5V | Env2 | Env1 | FilterQ | FilterF | KeyGlide | Interval | Shape | Wave | 0V | +5V

Switches

ENV1: Sw toggle 1-0-1 +5/open/0
ENV2: Sw toggle 1-0-1 +5/open/0
Trig : PushButton +5/open

Potmeters

P2-4-6-8: +5V/wiper/0V
(P2-4-6-8 mounted upside down, corrected in software)
P1-3-5-7: 0V/wiper/+5V